INSTALLATION INSTRUCTION

Product WIBAT

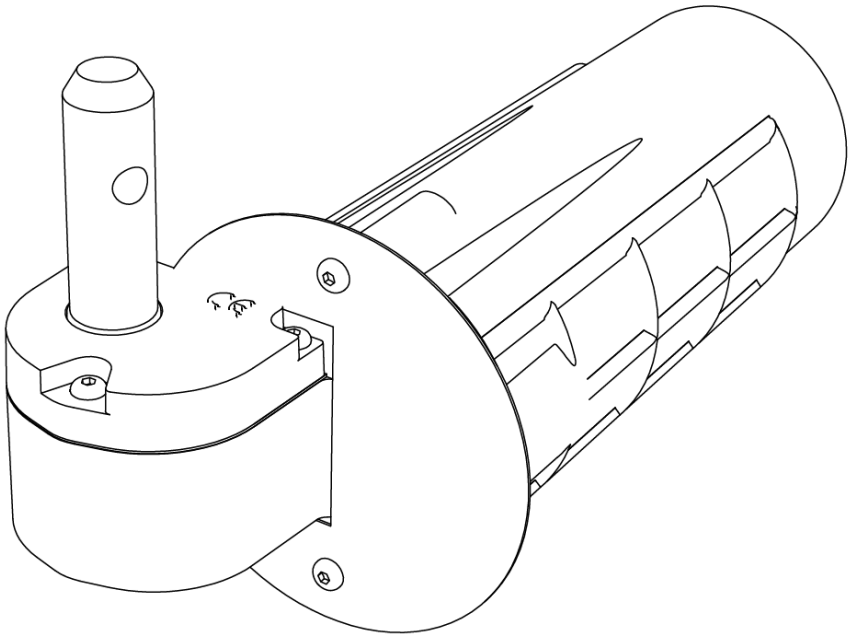

VERSION EN 3-09 ANG

2, rue des Métiers
21110 - Genlis
Tél. : (33) 03 80 37 85 71
Fax : (33) 03 80 37 88 61
http://www.mantion-smt.fr

⚠ WARNING: important safety instructions.

These instructions must be followed in the interest of personal safety; Keep these instructions.

WIBAT is exclusively designed for opening and closing swing shutters. It must not be used for any purpose other than that specified in these instructions. The manufacturer or supplier shall not be liable for any damage resulting from improper use thereof. The user alone shall be solely liable and assume any risks arising from improper use of the product.

This shutter motor must be installed by persons fully aware of the hazards involved in currents, drilling and chemical sealing who have the requisite qualifications to work on domestic installations in accordance with good practice.

Follow all the instructions because faulty installation can cause injury.
The assembly steps must be followed, as must the operating instructions, and safety rules must always be heeded.
Before installing the shutter motor, check that both the driven part and the entire WIBAT are in good physical condition and that the structure has the necessary load-bearing capacity for the WIBAT in its entirety.

The electrical installation must be done according to prevailing national standards and in accordance with all legal obligations and/or prevailing obligations to that effect.
(Electrical compatibility: voltage and frequency as marked on the product and that of the power network where it will be used.) Do not connect the device without first checking that the control circuit is dead.

Check the installation frequently to detect any imbalances or signs of wear or damage. Do not use the device if it needs repairing or adjusting.
Disconnect the power supply when cleaning it or carrying out other maintenance or servicing tasks.

Never modify or fit any additional parts to the device that may compromise safety without MANTION SMT's written permission.

Be very careful not to get your fingers caught when using the device.
The user alone is solely and entirely responsible for any breach of these safety rules, and any damage resulting therefrom.

The product must be stored indoors in a dry place at a temperature of between 0°C and +45°C.
When fitting it, the installation engineer must heed accident prevention instructions and the standards in force in the country.

Do not immerse the gear motor in water or splash it.
Do not dispose of it in fire or bring it into contact with flame or any heat source.
Do not use household products or chemicals to clean it. Only use a moist sponge and soap.
Do not dispose of the packaging in the environment; treat waste according to the standards in force in the country.

Keep products, devices and documentation out of reach of children.
Do not let children play with the fixed control devices. Keep remote controls out of reach of children.
When using a switch without a lock, make sure everyone else is kept at a distance.

Use only the MANTION SMT-approved embedding kit and drilling equipment.

The manufacturer or supplier shall not be liable for any damage resulting from the use of other products. If replacing the product, only use MANTION SMT or MANTION SMT-approved products.

Radio control:

Use of the wireless remote control is only authorized if any disturbance in the transmitter or receiver poses no danger to people or animals, or if such hazards are removed by other arrangements.
The user of the wireless control is not protected against interference generated by other telecommunications installations and remote-controlled devices. If there is a high level of interference, contact the organization in charge of measuring wireless interference (radiolocation).
Do not use the radio transmitter in places sensitive to radio transmissions (airports, hospitals) or only after taking all the necessary precautions.
The swing shutter remote control may pose risks and for this reason please heed the following points when using it:

1. Make sure no object or person is within range of the swinging shutters.
2. Only operate them when direct visual inspection is possible.

The wireless control is not a toy; do not let children play with it. Keep it out of reach of children and animals.

Terms of the guarantee

MANTION SMT products come with a 5 (five) years guarantee from the date of delivery.

The guarantee is limited, as decided by MANTION SMT, either to replacement or to repair of products MANTION SMT recognizes as faulty, with the proviso that:

1. Subject to MANTION SMT's written permission to return the products, the said products are returned to MANTION SMT forthwith with the details of the fault and a copy of the installation engineer or dealer's bill stating the date of installation.

2. The products have been stored, installed, maintained and used in accordance with MANTION SMT's instructions and specifications.

The guarantee is strictly limited to the provisions of this clause, and any other guarantee or liability, including loss of profits or damage directly or indirectly resulting from the sale or use of the products, is excluded.

MANTION SMT shall on no account be liable for drilling and embedding conditions.

MANTION SMT shall in any event only be liable for the WIBAT product. The guarantee does not apply in case of overvoltage or short-circuiting resulting for instance from connection errors, weather conditions such as lightning etc. The guarantee does not cover normal wear.

TECHNICAL CHARACTERISTICS

The WIBAT enables the automated opening and shutting of the flap shutters (one or two leaves). It is designed for domestic use.

	1 Leaf	2 Leaves
Minimal breadth	**0.30 m***	**0.60 m ***
Maximum breadth	**0.8 m***	**1.6 m***
Maximum area	**1.6 m²***	**3.2 m²***
Maximum weight per leaf	**50 Kg**	
Minimal distance for strap hinge/shutter	**30 mm**	
Typical movement finish	**Dynamic (stopping when hindered)**	
Voltage/current	**24 V DC ± 10%**	
Power/ Current	**100 W**	
Motor torque	**25 Nm**	
Shutter rotation speed	**1.9 rpm**	
Opening or closing time limit	**18 s**	
Temperature to be used at	**-30/+70 degrees C**	
Colour	**Black (other colours on request)**	

NB : All of the data in the table is by way of indication, depending on specific conditions (wind, state of hinges) and does not constitute a firm commitment by MANTION SMT
*** For all other sizes contact MANTION SMT.**

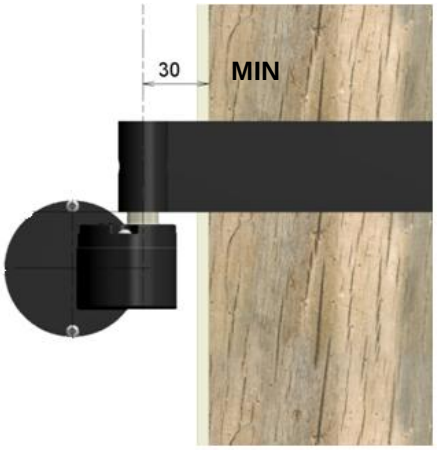

THE ABSOLUTELY ESSENTIAL MINIMAL DISTANCE BETWEEN THE FLAN OF THE SHUTTERS AND THE HINGE AXIS IS 30 mm

We recommend you do not operate the WIBAT with very strong winds; this could damage the shutters and the device

Associated with this product, we recommend using **steel or stainless steel** hinges thickness **5mm mini**

ASSEMBLY INFORMATION

LIST OF MATERIALS FOR INSTALLATION:

1 Rotary Comb hammer Drill
1 Diamond core bit ϕ 66 to 68mm
1 Steel drill bit ϕ 6,5 mm
Metric hexagonal keys 2 and 4
Flexible electrical wires 2 x 1.5 mm ^{2} and 3 x 0.75 mm ^{2}
1 Electrical box 60 mm depth (hard wired version)
1 concrete drill bit ϕ16 length according to wall thickness
1 Dispenser for chemical sealing
1 Sealing kit (with mesh sleeves)

CONTENT OF THE KIT for double motorisation:

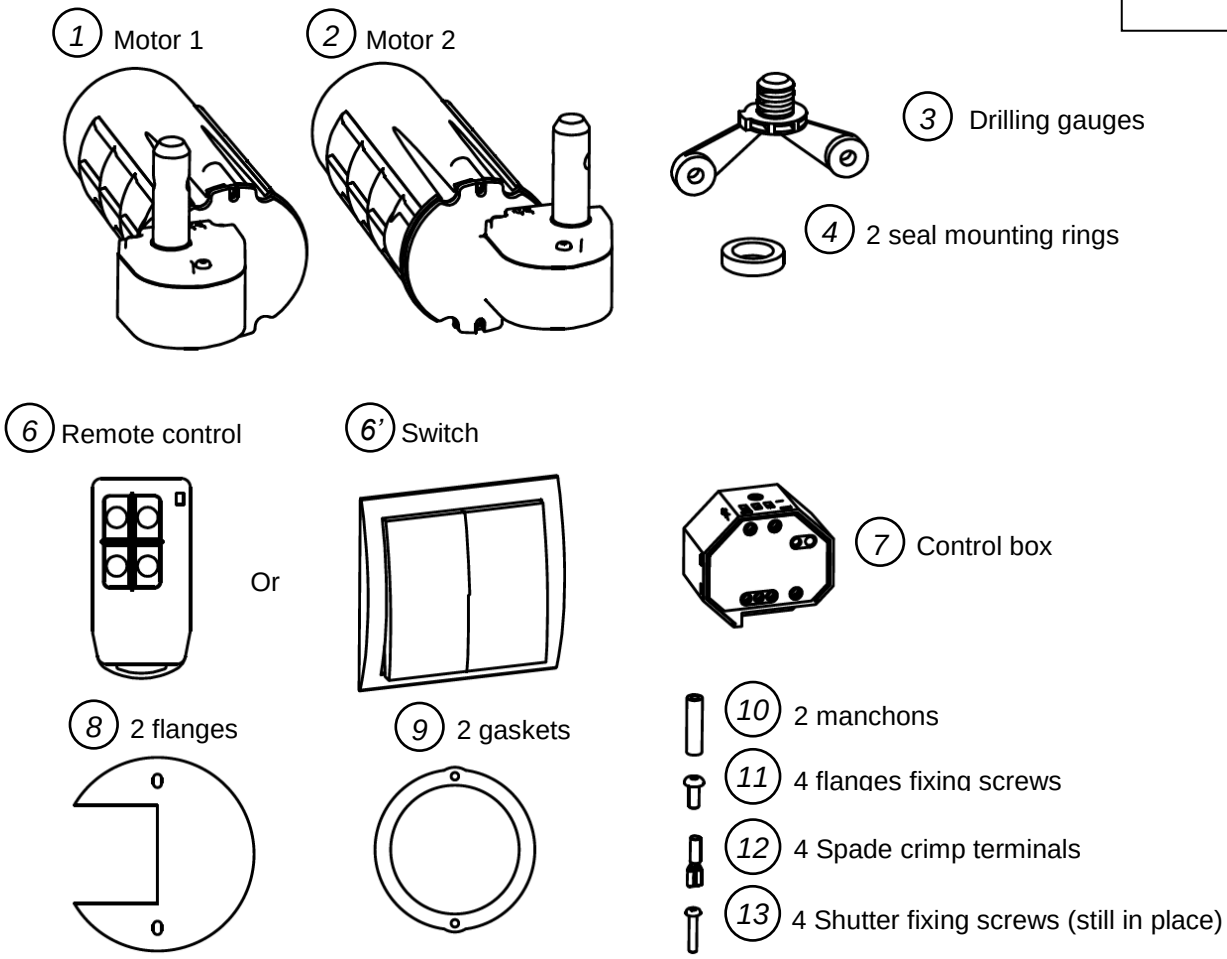

1 – CHECKING BEFORE INSTALLATION

A. SPACE OCCUPIED

If you do not have the recommended distance of 30 mm between the shutter flan and the hinge axis, it will be necessary to change the position of all of the shutter strap hinges, and remove the existing hinges before proceeding to the installation of the WIBAT.
When the hinges have been removed it is necessary to re-block the holes left.

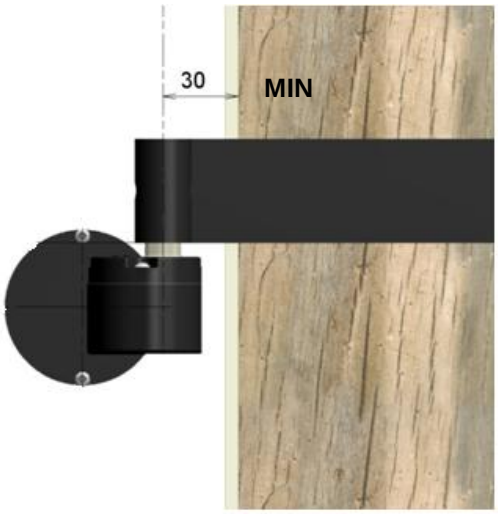

B. CHOICE OF HINGES TO MECHANISE

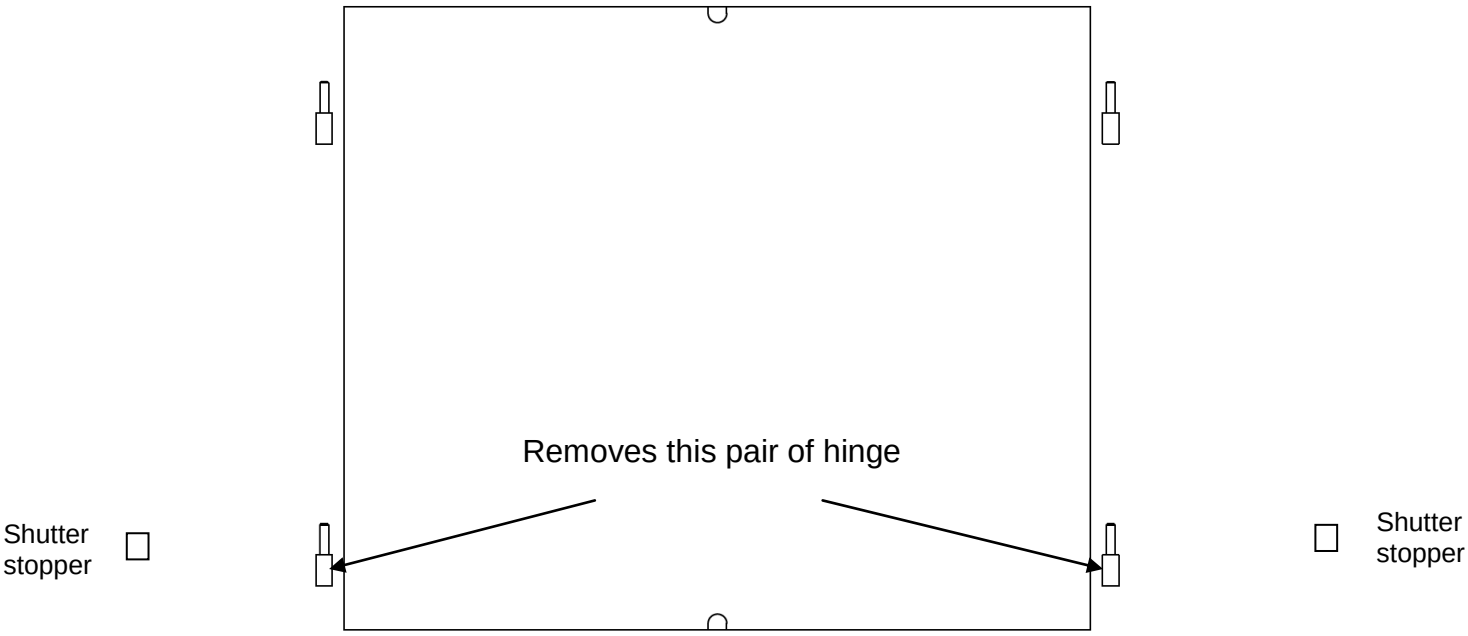

It is recommended to align stoppers with motorization

For shutters fitted with two strap hinges per leaf, MANTION SMT recommended to mechanised the bottom hinge. For shutters with three strap hinges, it is recommended that the hinge in the middle is mechanised.

C.Verify la the presence of high and low shutter stoppers

The presence of high and low shutter stoppers is essential for the proper functioning of the product.

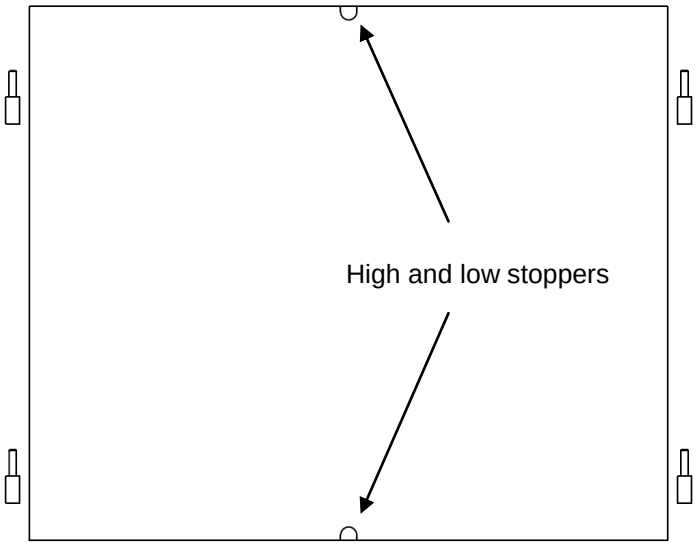

2 – DRILLING OF THE STRAP HINGES

a- Disassemble the shutters and mark the drilling site 20 mm from the edge of the strap hinge.
b- Drill the strap hinges with a 6.5 mm drill bit right through and very perpendicular to the shutter

The drilling can be done in parallel or perpendicular to the shutter.

hinge	drill
Ø 14 à 18	Ø 6,5
Ø 12	Ø 5,5

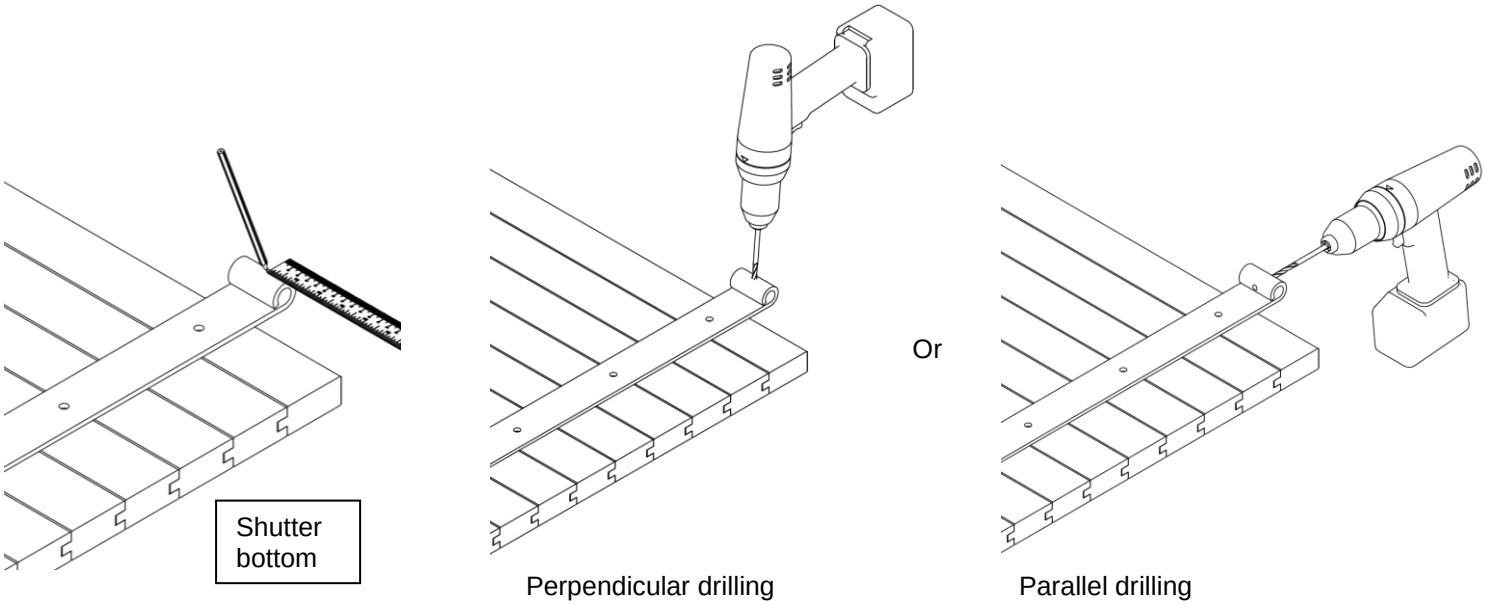

3 – MARKING FOR DRILLING

To ensure that the system operates smoothly, position and lock the shutters in the closed position and ensure that the hinge axis are vertical.

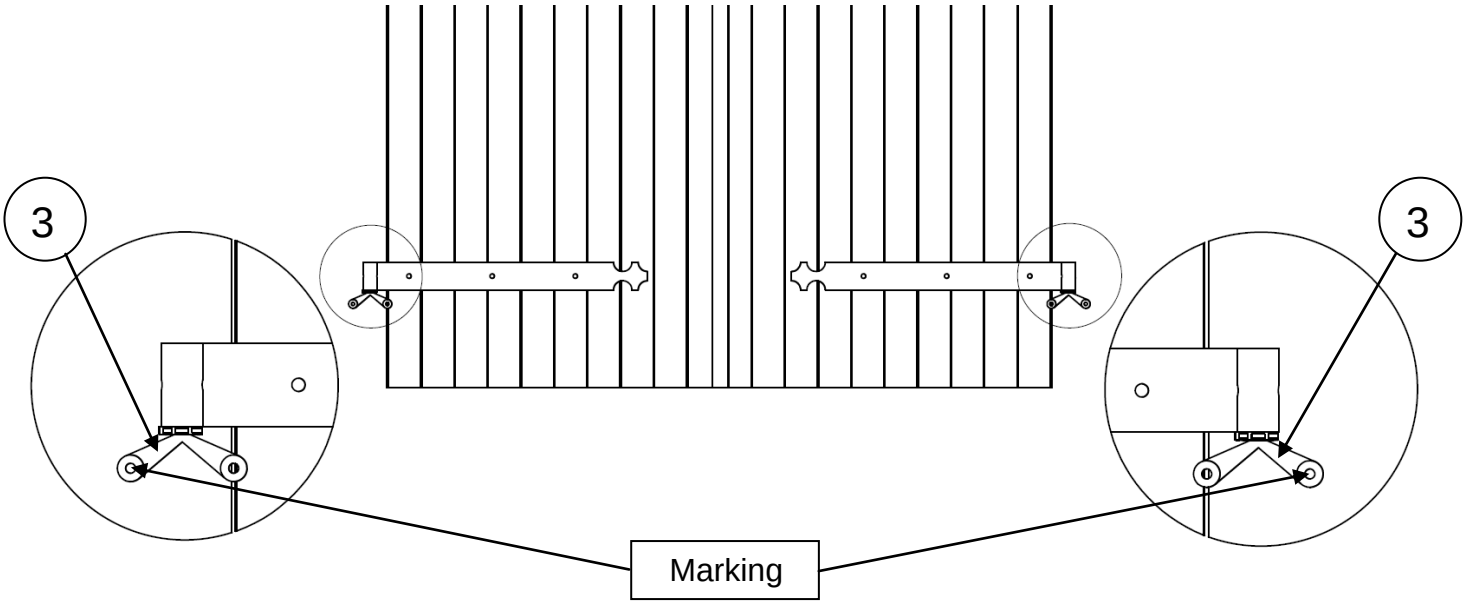

Install and wedge the shutters in a closed position. Put the drilling gauge (3) on the strap hinge of the shutter and draw in the area to be drilled with a pencil.

4 – DRILLING OF THE WALL

A. Remove the shutters.
   Use the rotary comb hammer on **drilling only** position. Do not use it on Hammer position.
   Fixe the diamond core bit and the hole –starting aids.

B. Drill the 2 holes to a depth of 150 mm always vertically and horizontally perpendicular to the wall.

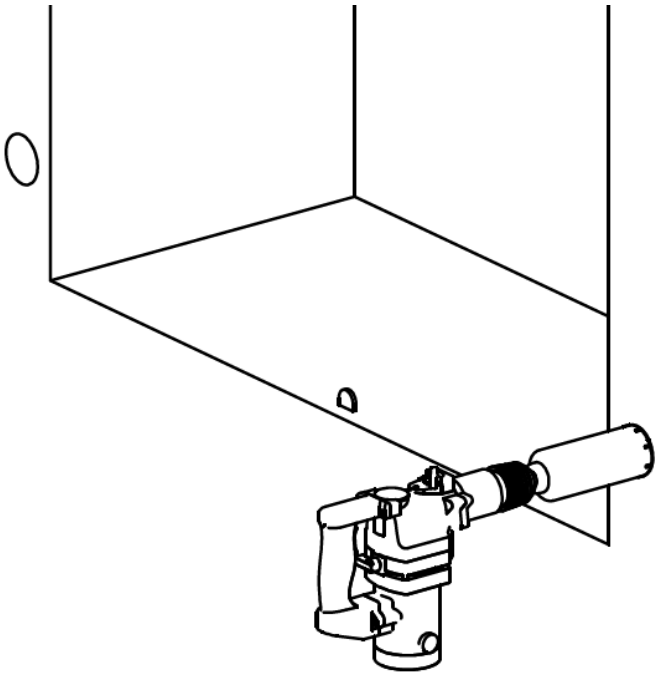

For drilling, follow the safety instructions recommended by the manufacturer of the drill.

C. Drill the 16 mm diameter holes for sheathing

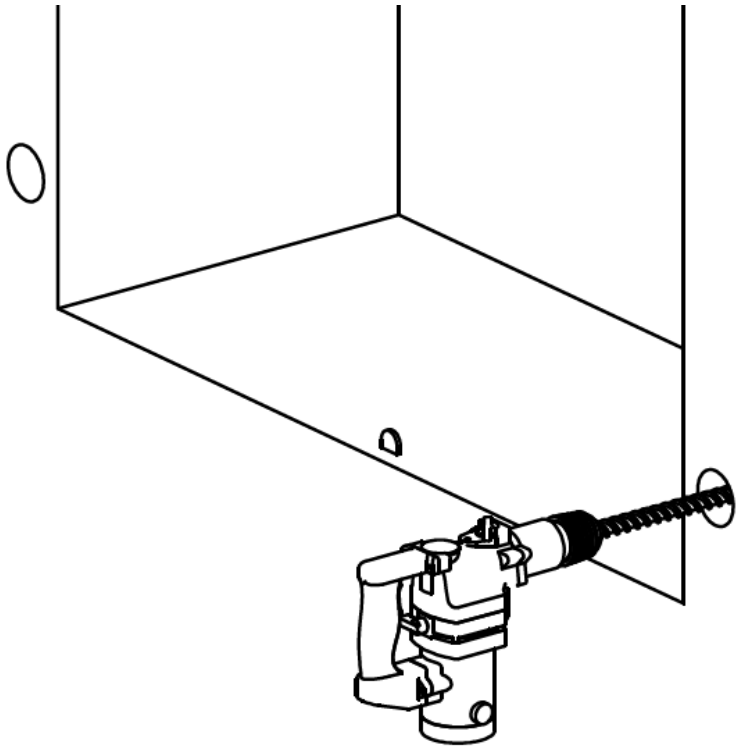

⚠ Clean tidily the holes with a vacuum cleaner and a metallic brush. The chemical seal doesn't adhere on dust

5 – SETTING UP OF THE MECHANISED HINGE

A- Unscrew the two mounting screws (13). Take the motor from the fitting box guard.

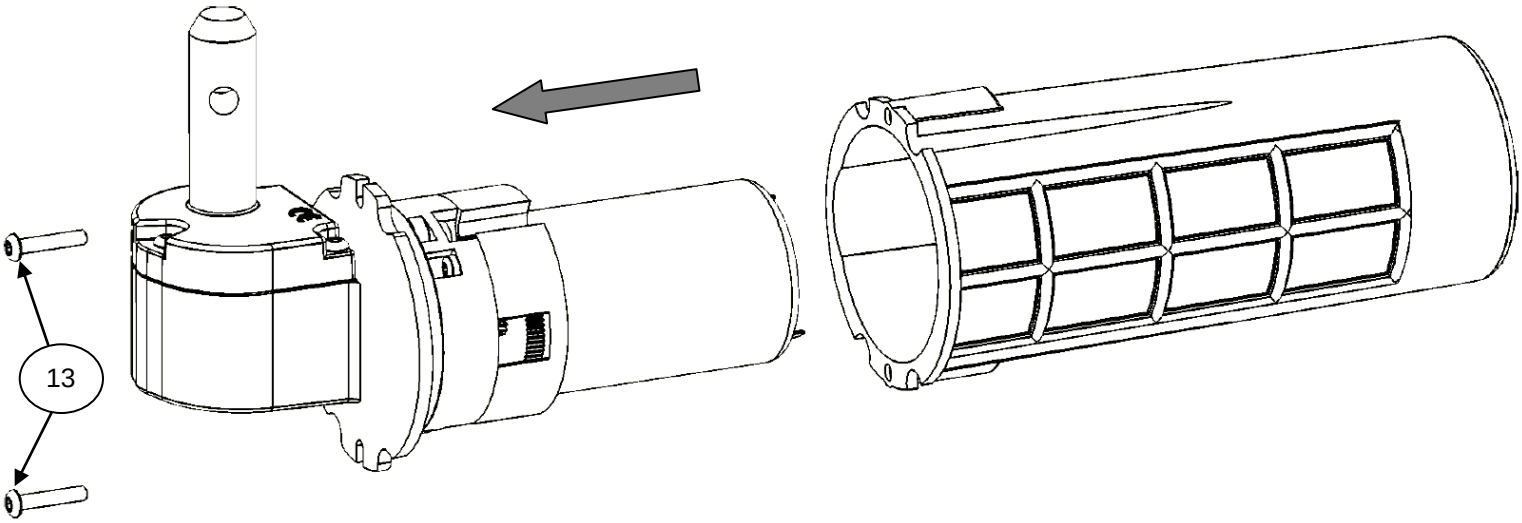

B- Provide a sheath for the electrical connection. Prepare for the wire to be 200 mm long on the other side of the wall.
Fit the mesh sleeve furnished with the sealing WIBAT and the fitting box guard in the hole.
Make penetrate the sheath in the box guard.

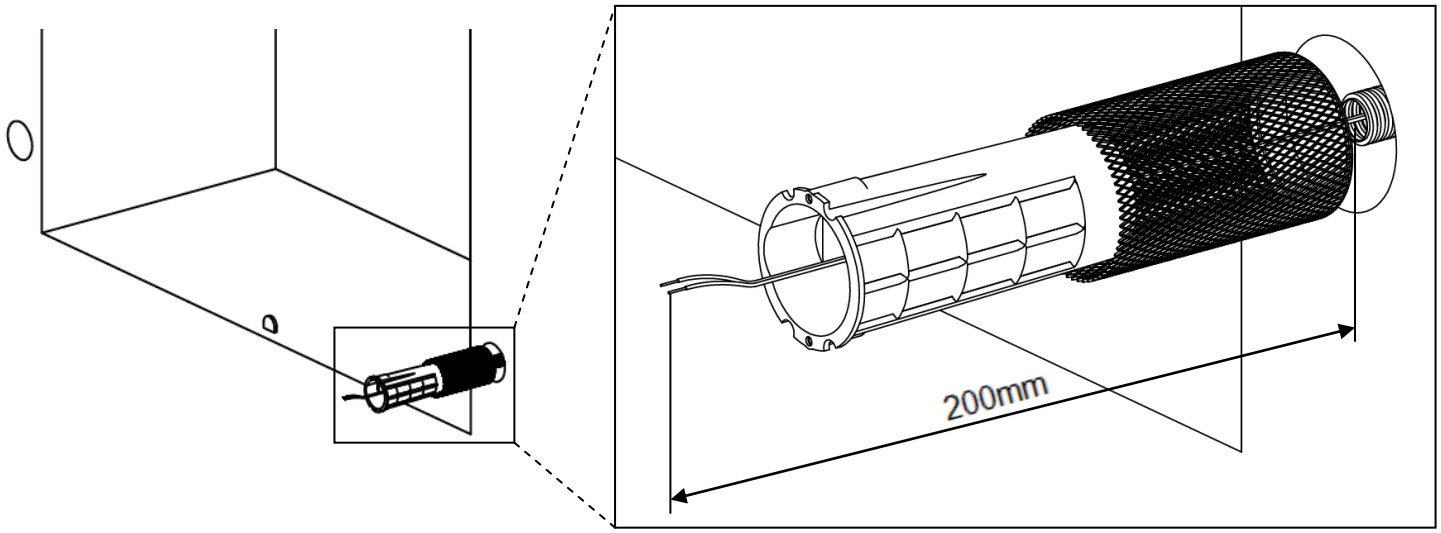

In case the wall is porous and to avoid water seepage through the back of the product, MANTION SMT recommended to **silicone seal** in the cable hole at the bottom of the box guard.

C- Pass wires through the joint (9).
Connect wire according to the wiring diagram and reassemble the case.

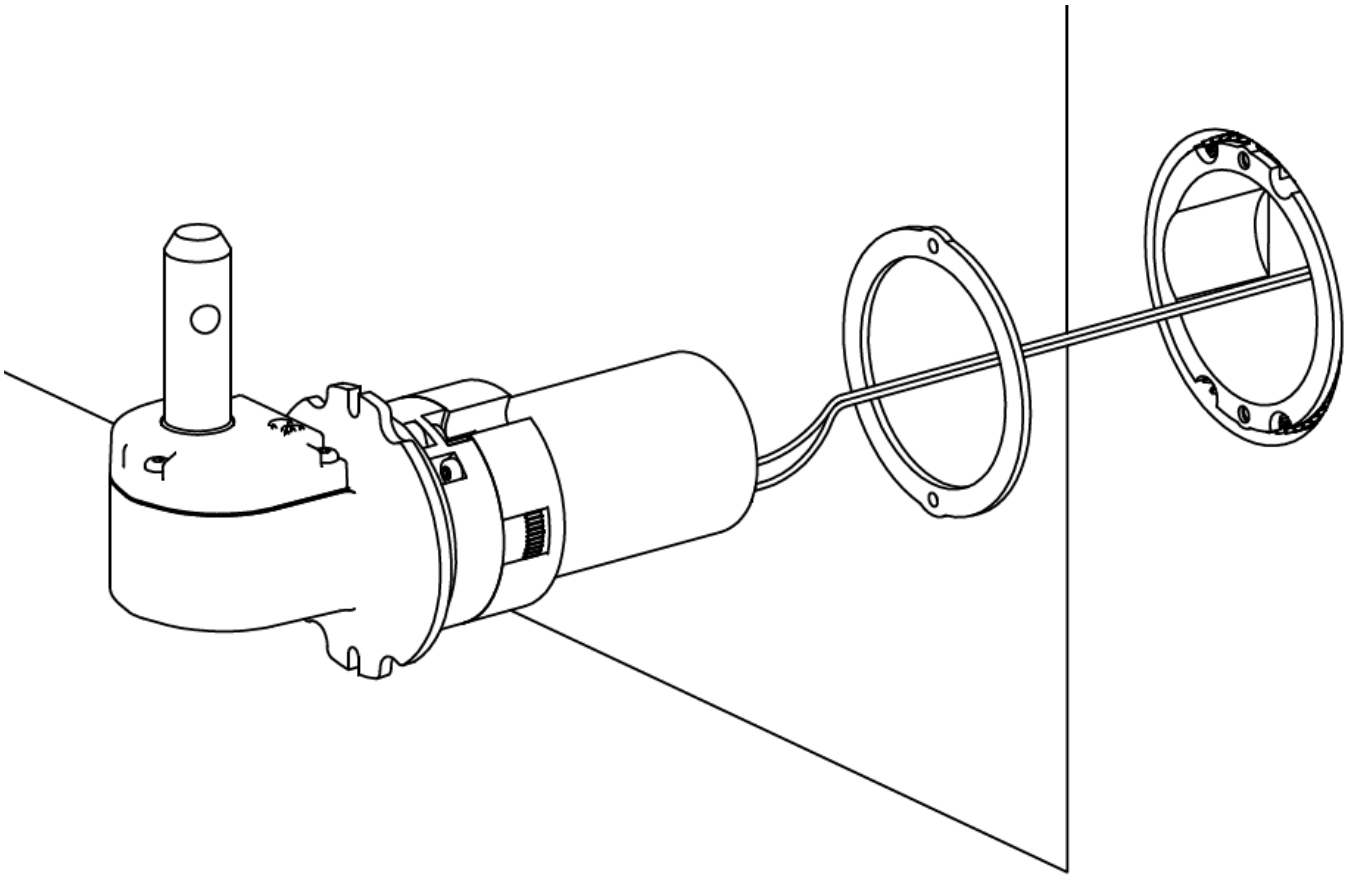

D. Turn the motor several times to twist the wires and get up again to the case.

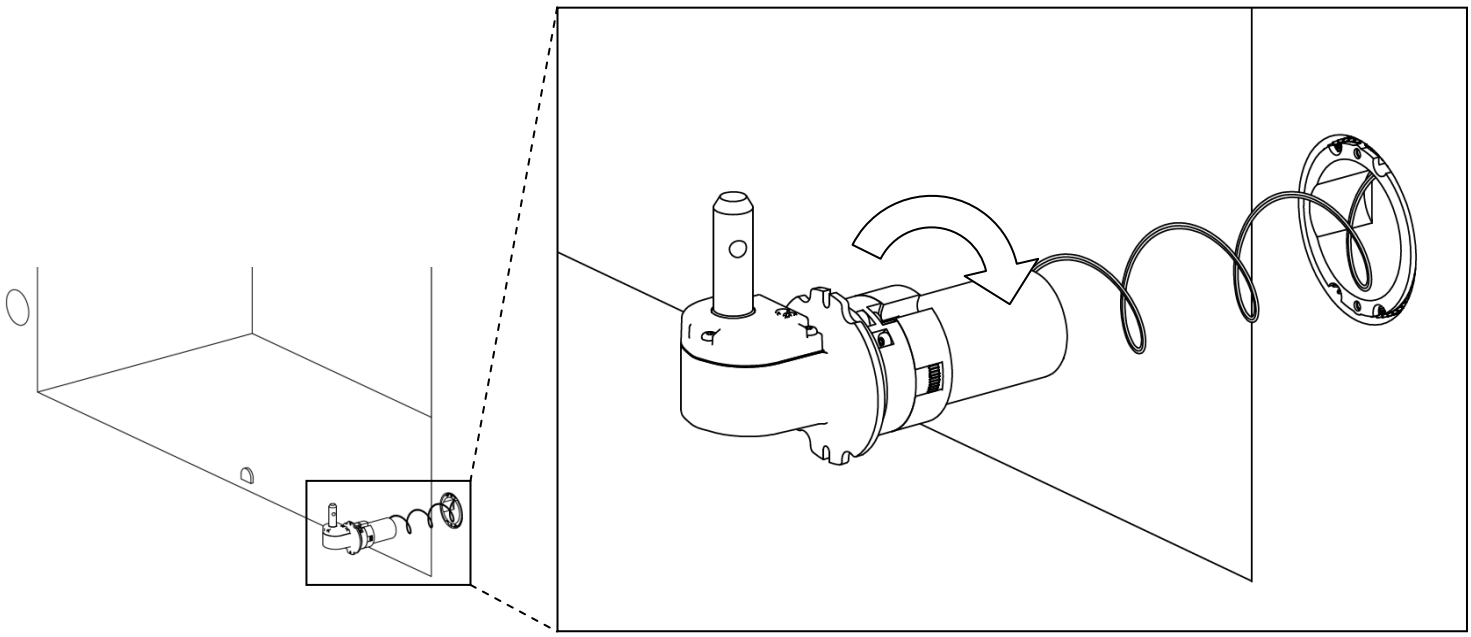

E. SHUTTERS INSTALLATION

Position the rings (4) on the 2 hinges and readjust the shutters in place.

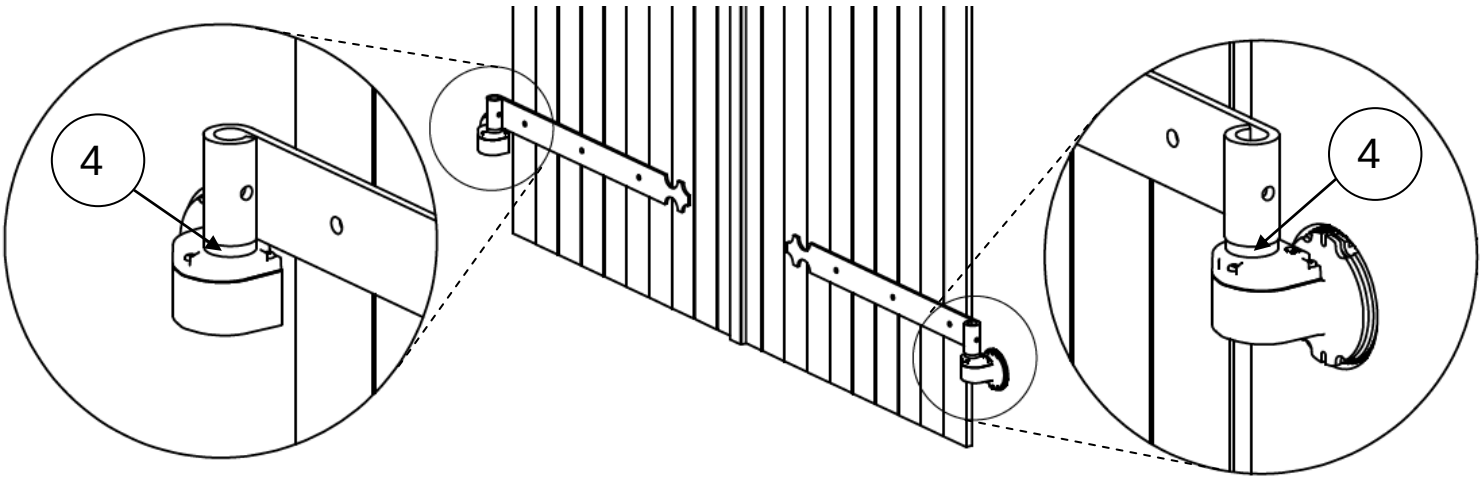

Fix the hinges motorized on the strap hinges.

6 – SEALING

Pay attention to the correct vertical alignment of the hinges.

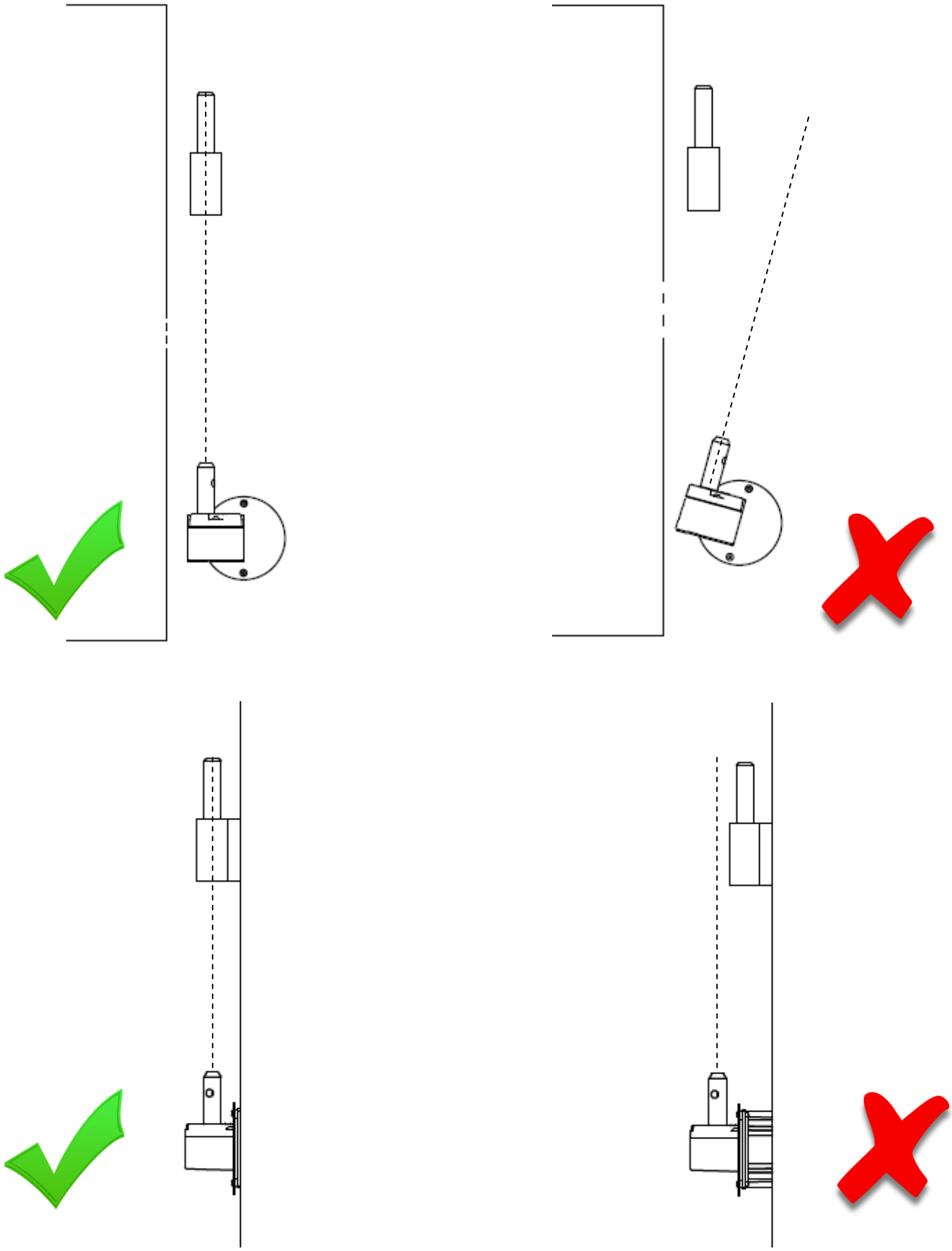

Use the nozzle with its extension diameter 6 mm.
Inject chemical sealing Approve by MANTION SMT in the cells of the engine while starting with 2 blows of trigger at the bottom of the mesh sleeve then distribute 3 other blows while returning towards the wall. Make this operation in the 4 holes envisaged to this end.
5- Add the chemical seal around the fitting box in order to fill the cavity around the perimeter.

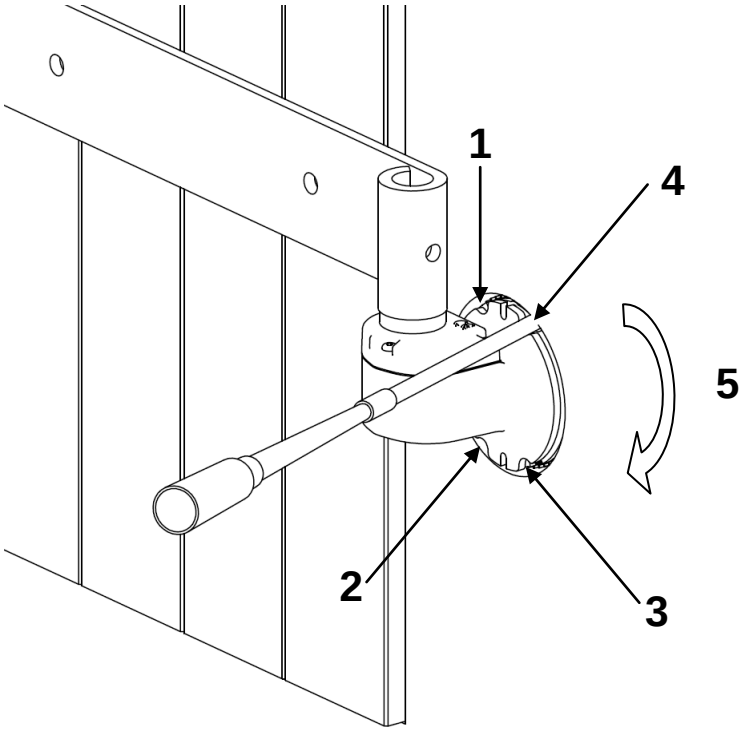

Clean the surpluses of sealing with a wet sponge.
Respect the time of catch according to the data of the manufacturer before any handling.

Mount the mask of protection (8) with the 2 screws (13).

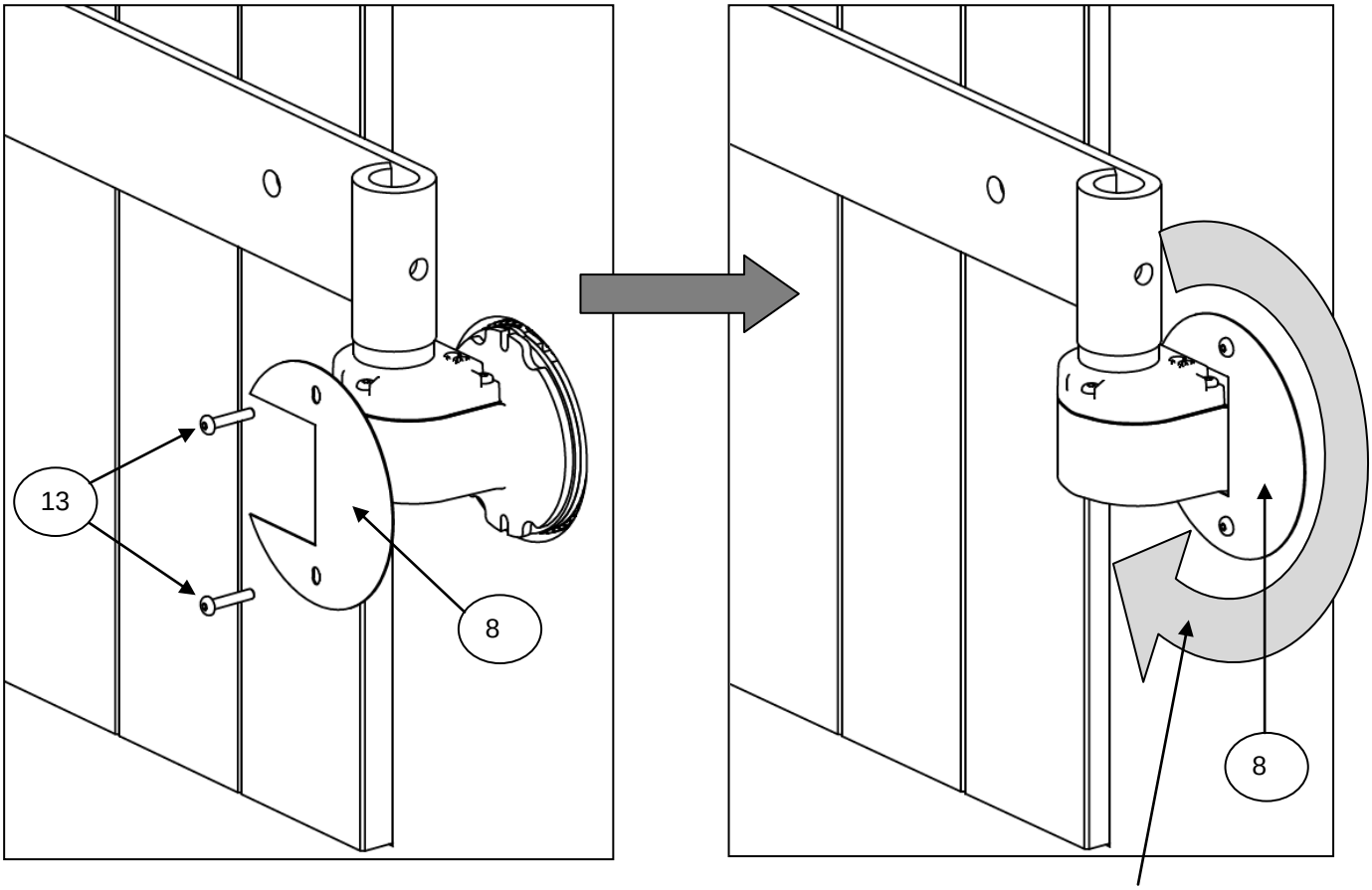

In order to avoid water infiltration into the product, MANTION SMT recommends placing silicone seal around the periphery of the protective flange (8).

7 – ASSEMBLY OF THE SHUTTER ON THE MECHANISED HINGES

a- Dismount the shutters.
b- Withdraw the ring (4).
c- Mount back the shutters.
d- Apply threadlocker on the 2 M4 screws (11)
a- Fix the shutters on the hinges by the sleeve (10) and 2 screws M4 (11) on each hinge.

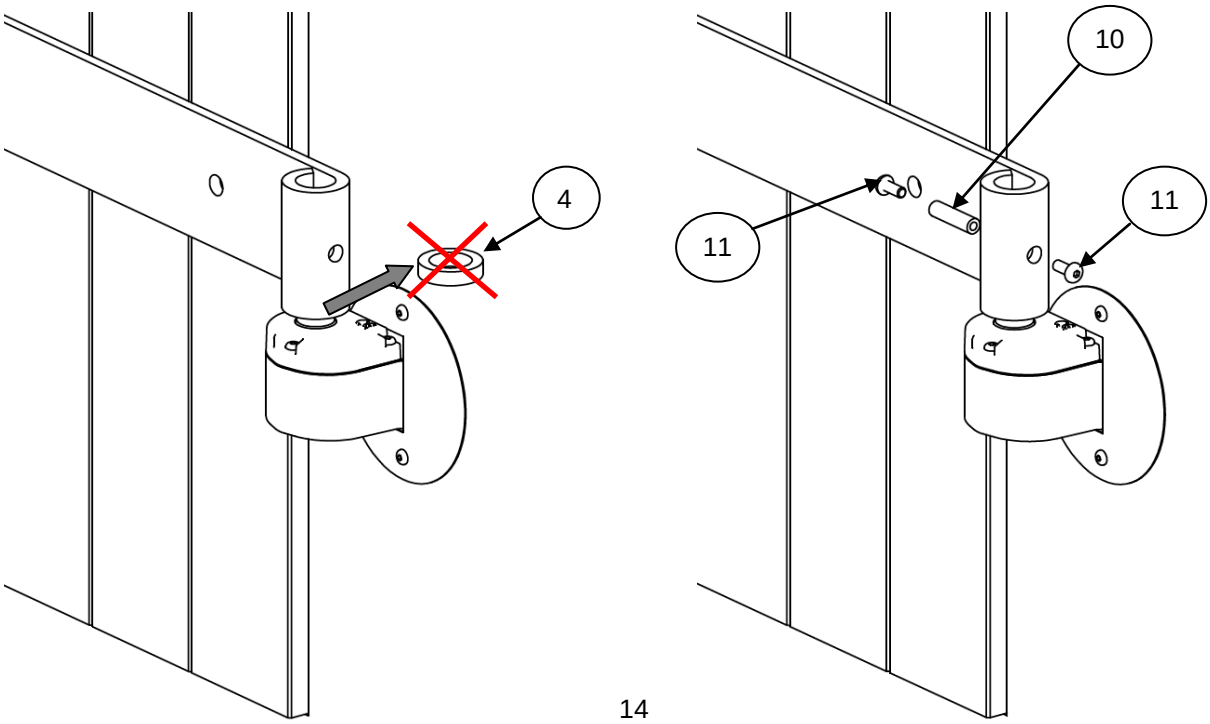

8 – SETTING UP OF THE CONTROL CASING

1) **Hard-wired kit**:

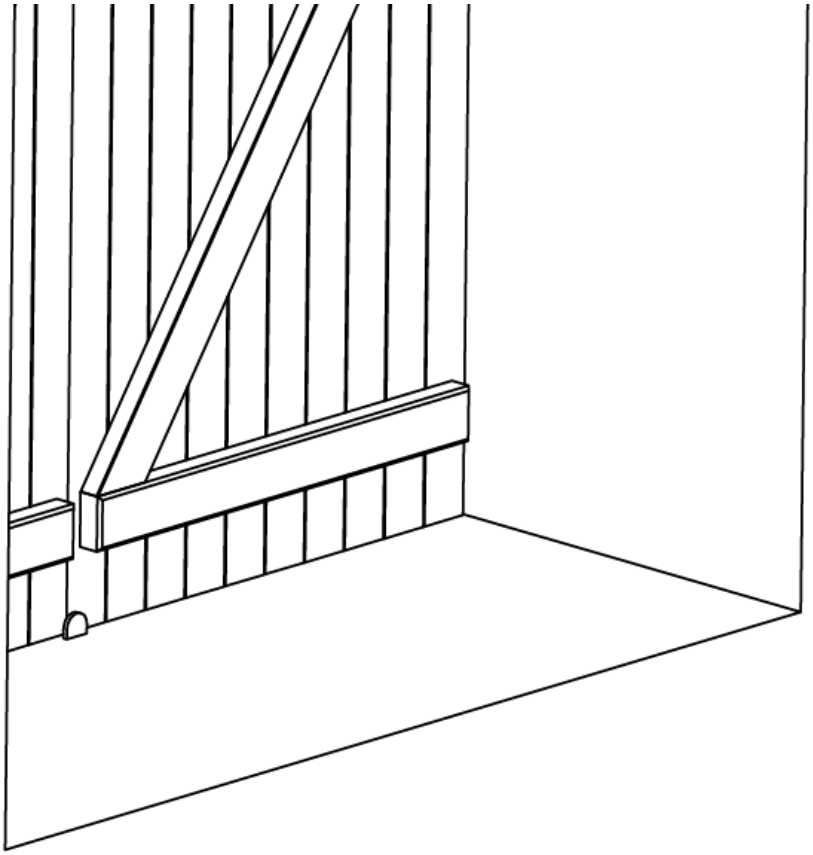

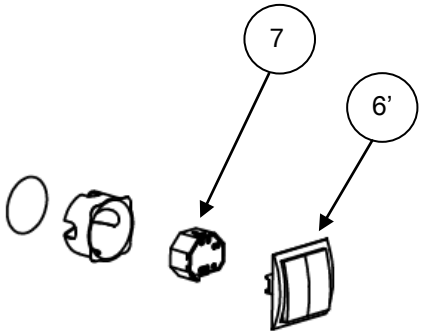

For the hard-wired kit attach a 60 mm deep flush fitting box to the inside of the house and connect the wires as shown in the cabling diagram.

2) **Radio**:

The casing can be installed at your liking, in the false ceiling, the wall lining, a flush fitting box etc. …

ELECTRICAL CONNECTION

Pay attention to your safety:

- The electrical installation must be carried out in accordance with the national standards in force, as well as any obligations foreseen by the law and/or by all obligations in force, laid down for this purpose.
- Electrical connection must take place without voltage: Do not connect the sector before having disconnected all assembly operations.
- Do not use any switches other than those supplied in the kit (4)
- If the cables from the control casing are damaged, contact our after-sale department.
- The 220V-24V feed used must comply with standards in force

ELECTRICAL CONNECTION RADIO VERSION

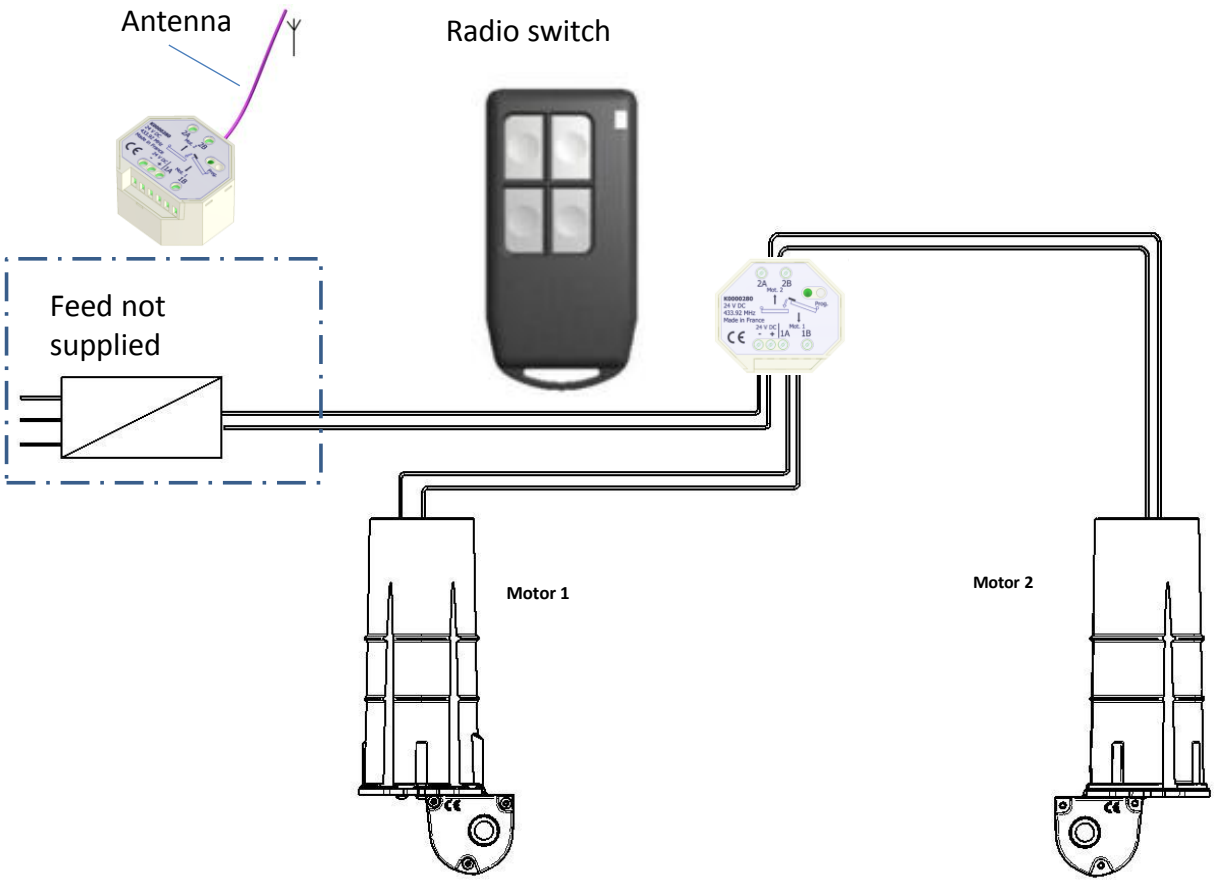

ELECTRICAL CONNECTION HARD WIRED VERSION

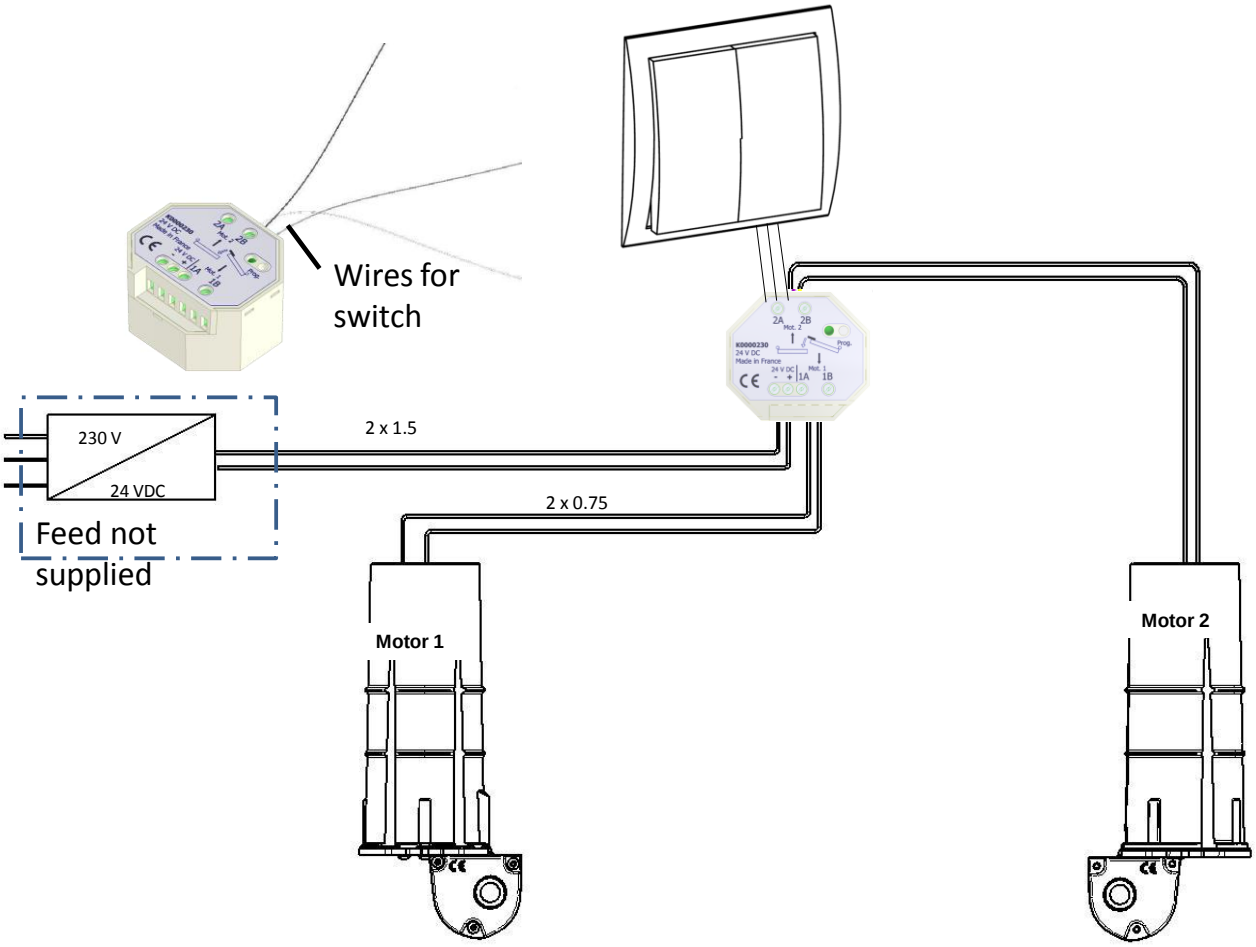

Identification of motor 1.

Motor 1 mechanises the covered flap.

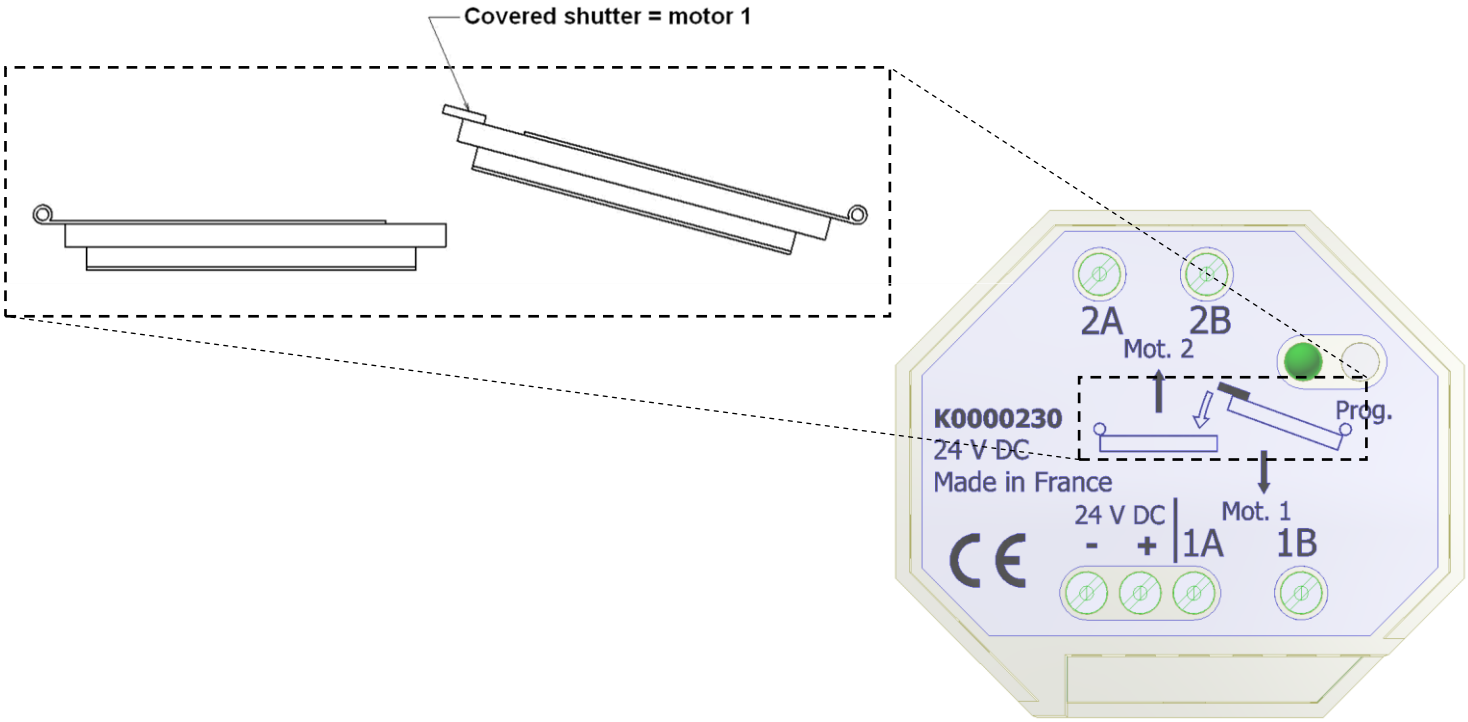

Connection of motors

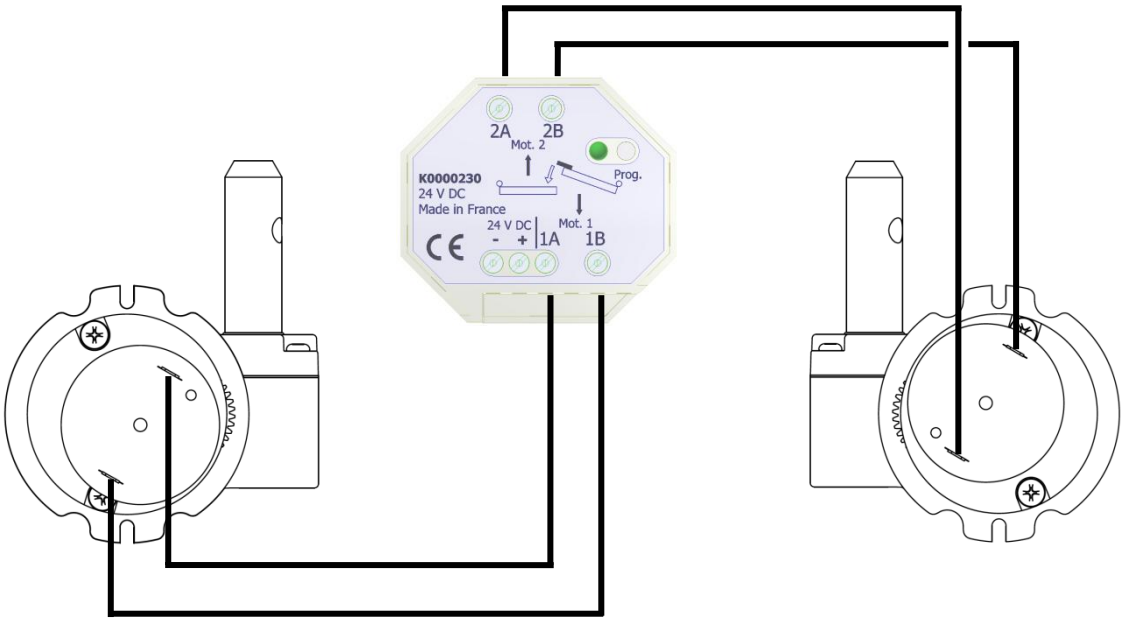

If your WIBAT is intended for the mechanisation of a single flap shutter, it is absolutely essential to connect it on motor 1

Be careful to the polarity of the engines Following model

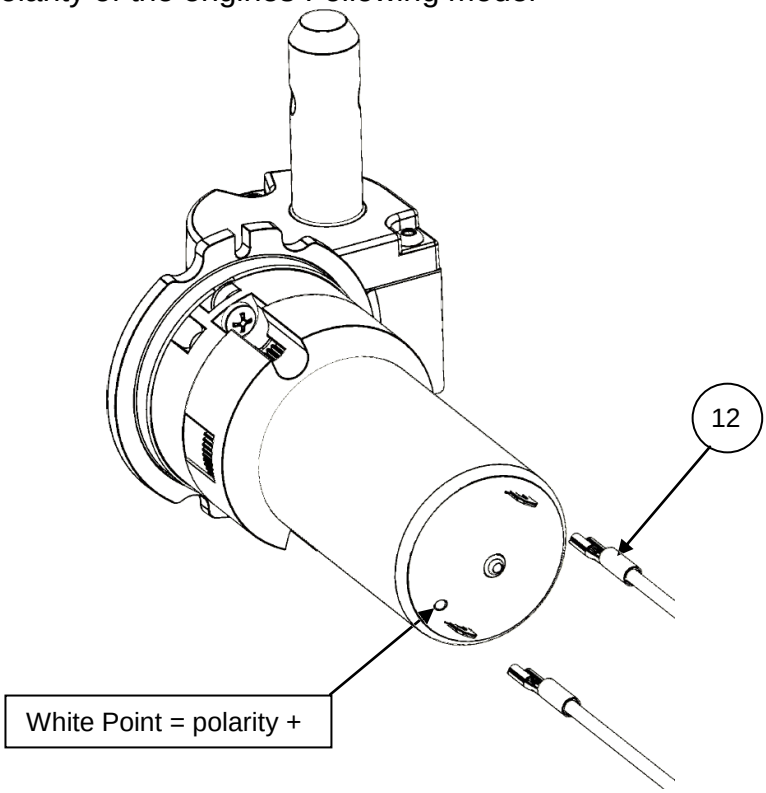

Feed connection

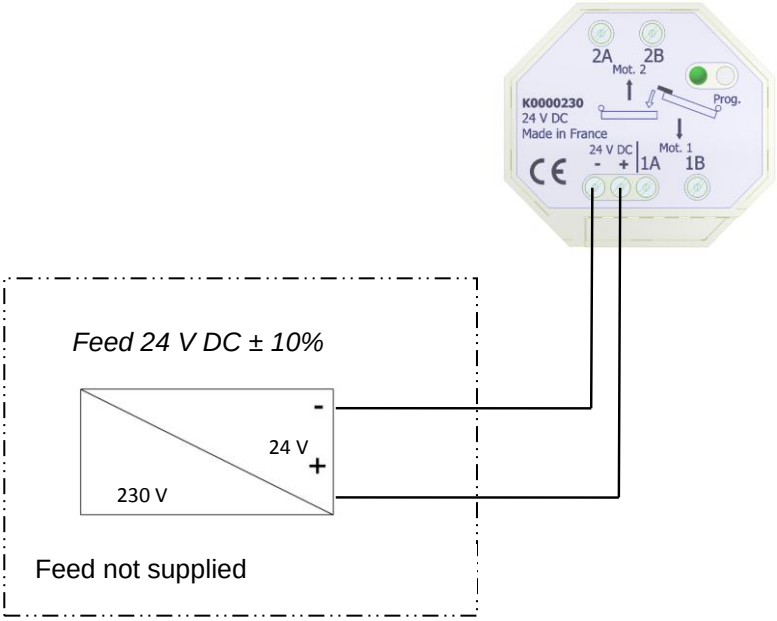

Connecting the power supply should meet the recommendations of the manufacturer thereof.

Push button connection Wired version

To access the push button to connect the wires of the switch, remove the two front buttons => pull down the button:

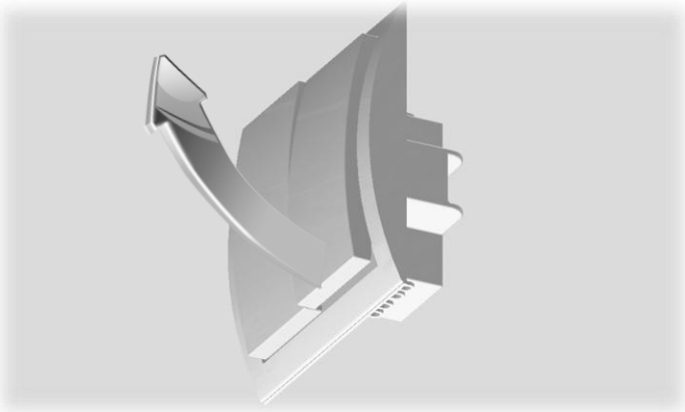

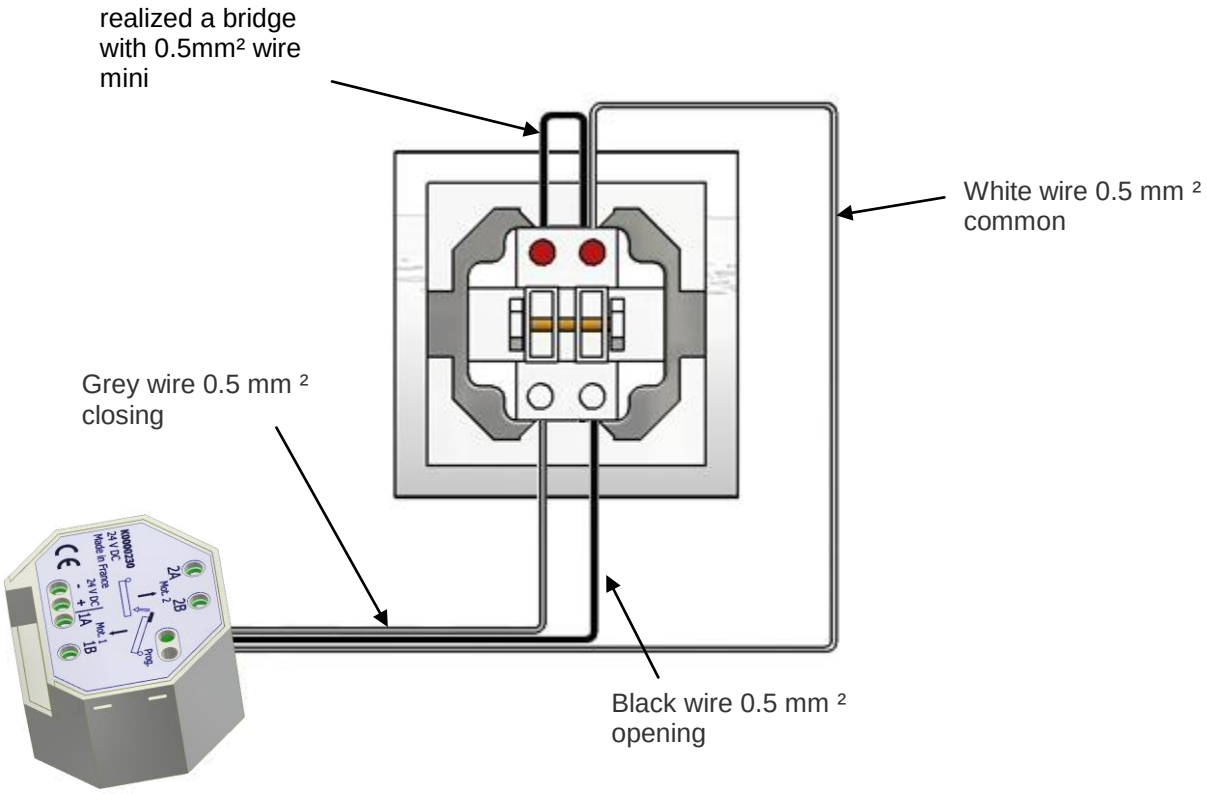

Pressing one of the buttons and at the same time insert the wire into one of the two cavities located below the button. Releasing the button, the wire is then clamped in the cavity. Check by gently pulling on it. Reiterate handling for each of the three wires.

Radio switch connection

Screw or stick the radio switch to the place of your choice at least 20 m from the control casing.

BRINGING INTO SERVICE

The product WIBAT has a push button to learn (benchmark prog.) That determines the stroke of each wing.
The motors work at low speed as the apprenticeship has not been carried out.

Operation directions:

1) Turn on the system.
2) Only for radio products:
Pairing your radio transmitter by following the instructions provided in the instructions for pairing radio
3) Start the learning cycle:
With a small screwdriver, press the prog.

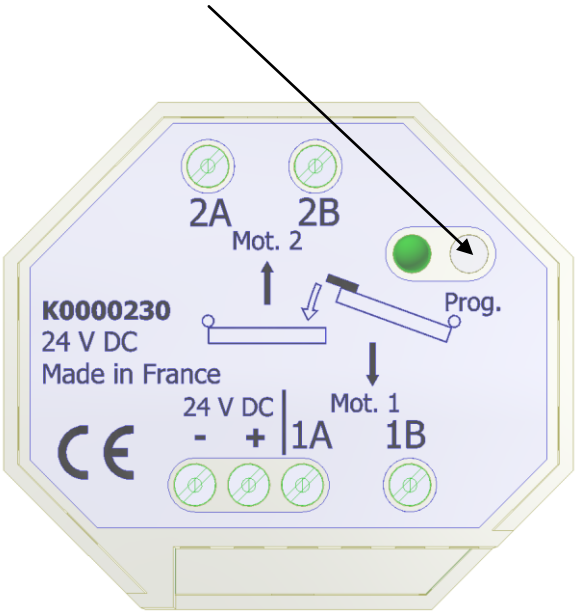

4) The shutters open completely and then close. The Led blinks during all this cycle
During the closing, shutter 2 is shifted 6 secondes compared to shutter 1.

When the shutter is close and the Led is no longer flashing, the system is operational.

Operation of the shutters

Opening of the shutters	Press on the open push button
Closing of the shutters	Press on the close push button
Stopping of the shutters in middle position	Repeat the last command. (Open button when opening in progress) (Button closure if closure in progress.

The WIBAT is fitted with a failsafe metric ampere measure. In the event of hindrance during opening or closure, the shutter turns back on the direction it is working in and returns to its initial position.

Wireless setup instructions

1 – Radio specifications:

Frequency	:	433.92MHz
Transmitter range	:	approx: 70 metres line-of-sight*

* Propagation of radio waves varies according to the medium they traverse. The range of the radio waves will vary according to the type of construction:

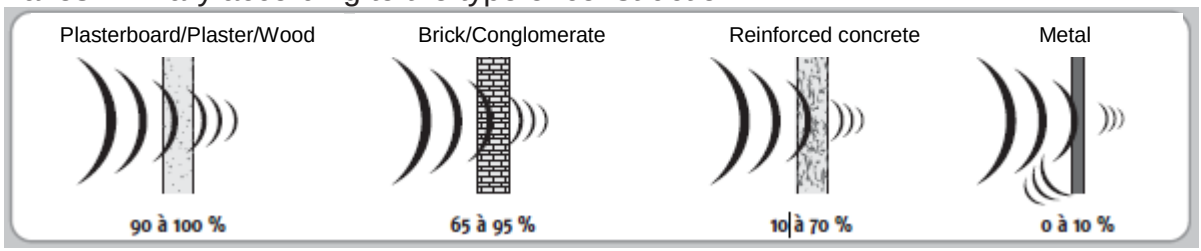

If reception is poor, use the radio repeater ref. C0004760.

2 – Setup

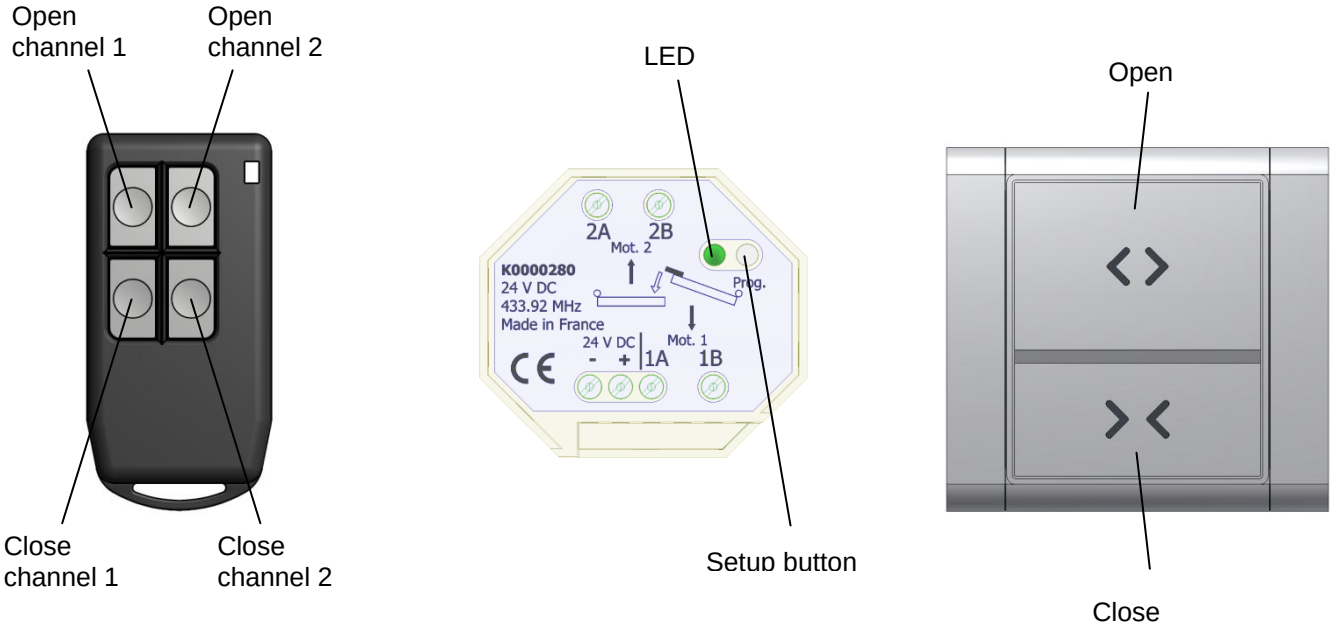

Peering a switch:

1. **Press and hold down the setup button** for roughly 5 seconds.
   The LED comes on (the card is in "radio peering" mode)
2. While the LED is on and not flashing: **press the "open" and "close" buttons simultaneously** on the switch.
   The LED flashes quickly then goes out: the switch is now peered.

Peering a remote control:

1. **Press and hold down the setup button** for roughly 5 seconds.
   The LED comes on (the card is in "radio peering" mode)
2. While the LED is on and not flashing: **press the "open" and "close" buttons simultaneously** for the desired channel on the remote control.
   The LED flashes quickly then goes out: the switch is now peered.

Disabling a switch:

1. **Press and hold down the setup button** for roughly 5 seconds.
   The LED comes on (the card is in "radio peering" mode)
2. **Press and release the setup button**
   The LED flashes slowly (card in "radio suppression" mode)
3. While the LED is flashing, **press "open" and "close" simultaneously** on the switch.
   The LED flashes quickly then goes out: the button has been disabled.

Disabling a remote control:

1. **Press and hold down the setup button** for roughly 5 seconds.
   The LED comes on (the card is in "radio peering" mode)
2. **Press and release the setup button**
   The LED flashes slowly (card in "radio suppression" mode)
3. While the LED is flashing, **press the "open" and "close" buttons simultaneously** for the desired channel on the remote control.
   The LED flashes quickly then goes out: the remote control has been disabled.

Disabling all transmitters (switches, remote control...):

1. **Press and hold down the setup button** for roughly 5 seconds.
   The LED comes on
2. **Press and hold down the setup button** for roughly 5 seconds.
   The LED flashes quickly then goes out: all switches have been disabled, learning is cleared too.

Other information

When the board is ready to receive a radio ID code (light on steady – record – or flashing slowly – disable), the LED will go out after 20 seconds of inactivity: the board has reverted to its normal operating mode and you will need to start the procedure from the beginning again.
When the card is in "radio disable" mode, a short press on the setup button will turn off the LED, and the card will revert to normal operating mode.

OPTIONS

1- Connection option 24 VDC electromagnetic lock

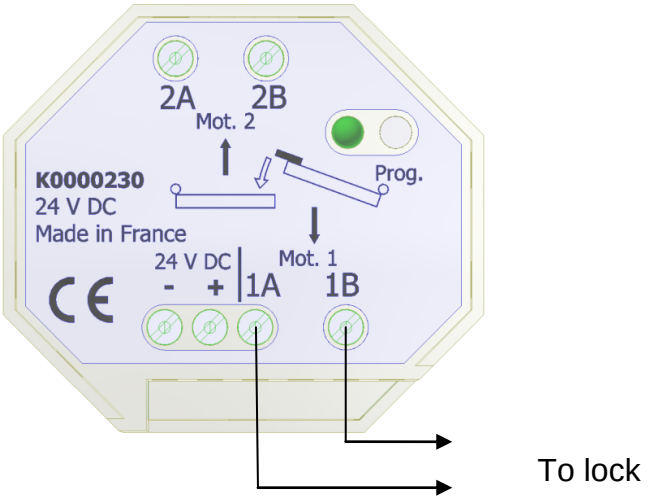

Connect the electromagnectic lock on the 1A and the 1B of motor 1

2- Connection of the output "Status" (to interface with a wired automation system only)

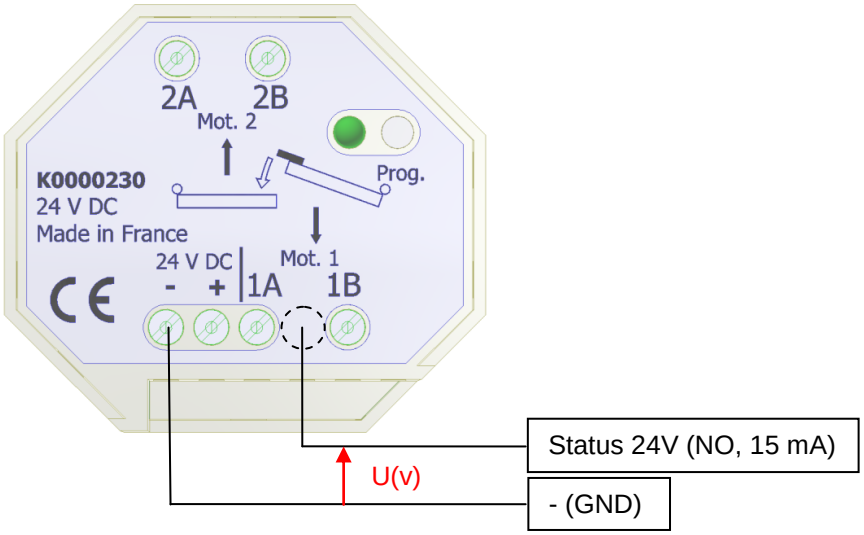

When the shutter has finished opening or closing, the Status output changes to 1 for 300 ms

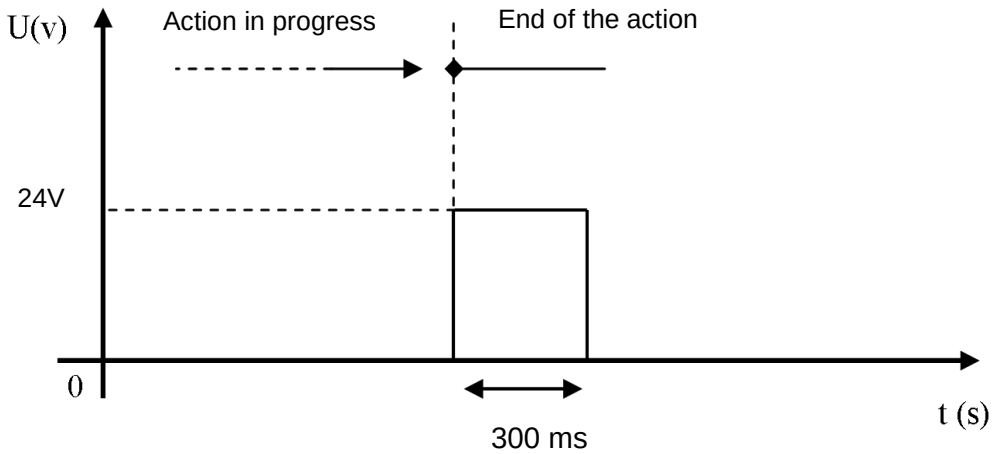

Voltage present between Status output and - (GND) at the end of the movement.

Diagnostic aid :

symptoms	Probable causes	Solutions
The motors do not work	The control unit is not powered	Check the connection of the control box to power supply. Check that the power supply is properly connected to the mains
The motors operate at low speed	Learning problem	Repeat the learning procedure (see manual)
The motors do not slow down at the end of the stroke	Learning problem	Repeat the learning procedure (see manual)
The shutters do not move during the learning process	Start the learning cycle when the shutters are open	Close the shutters and repeat the learning cycle (see manual)
The shutter with overlap is the first to close	Motor 1 and motor 2 connections inverted	Invert the motors connection : Connect motor 1 instead of motor 2and vice versa (see manual)
The shutters open when you press close	Motors incorrectly connected	Invert the connection of motors (see manual)
	The control knob connection is incorrect	For Wired version, Check the knob's connection (see manual)
When you press close, one shutter opens and the other closes	Motors incorrectly connected	Invert the connection of motors (see manual)
When you press open, the shutters close	Motors incorrectly connected	Invert the connection of motors (see manual)
	The control knob connection is incorrect	For Wired version, Check the knob's connection (see manual)
When you press open, one shutter opens and the other closes	A motor is incorrectly connected	Invert the connection of motor (see manual)
the shutter ahead in a bumpy	wrong mounting of shutter	*Make sure the shutters rotate properly with out any hard point*
The shutter begins its course and returns to its position	wrong mounting of shutter	Make sure the shutters rotate properly with out any hard point
	Presence of an obstacle	Remove the obstacle
The shutter does not fully close and/or open	wrong mounting of shutter	Make sure the shutters rotate properly with out any hard point
	Presence of an obstacle	Remove the obstacle
The shutter goes too far when closing	No shutter stops	Check that there is a shutter stop at the top and the bottom
The motor runs but the shutter does not open (or close)	Strap hinge screws broken or missing.	Fit new screws
The motors do not start when open or close is requested	The control is faulty	For the wired version, check the button's connection For the wireless version, check that the batteries are good (The LED should light up when pressed once)